THE FISK AWA RADIOLA

Model 56

FIVE VALVE, TWO BAND, UNIVERSAL A.C.—D.C. OPERATED, SUPERHETERODYNE

Technical Information & Service Data

ELECTRICAL SPECIFICATIONS

TUNING RANGES.	R.F. ALIGNMENT SETTINGS.
"Standard Medium Wave"—1600-550 K.C.	"Standard Medium Wave"—600 K.C. (Osc.), 1500 K.C. (Osc. and Aerial).
"Short Wave"—13.6-43M.	"Short Wave"—15M.

INTERMEDIATE FREQUENCY ..... 460 K.C.

POWER SUPPLY RATING ..... 200-260V Universal, A.C. or D.C.

VALVE COMPLEMENT.

6J8G Converter	25L6G Output Pentode
6U7G I.F. Amplifier	25Z6G Rectifier
6B6G 2nd Det., A.V.C. and A.F. Amplifier	302 Barretter

DIAL LAMPS ..... 3.2V., 0.35 Amp.

LOUDSPEAKER	Moulded Cabinet AE18	Wooden Cabinet. AE19

Loudspeaker Transformer TT107

Voice Coil Impedance ..... 1.75 ohms at 400 cycles

UNDISTORTED POWER OUTPUT ..... 2.2 watts

WARNING: Two earth terminals are provided, one on the chassis, marked "R.E.," and the other on the Filter Unit. In practically all cases quieter reception is obtained with an earth wire connected to the latter. Do not connect an earth wire to any other component of the instrument.

The cabinet back panel has been fitted with a power plug in such a manner that when the panel is removed the current is automatically cut off from the receiver, line filter, etc. This has been done as an additional safeguard against shock, therefore the fitting should not be altered in any way to defeat this object.

ALIGNMENT PROCEDURE.

Alignment should only be necessary when adjustments have been altered from the factory setting or when repairs have been made to the tuned circuits. Climatic conditions should not seriously affect the performance of the receiver.

It is important to apply a definite procedure, as tabulated, and to use adequate and reliable test equipment. Instruments ideally suited to the requirements are the A.W.A. Junior Signal Generator, Type 2R3911, or the A.W.A. Modulated Oscillator, Type C1070. An output meter is necessary with both these instruments.

If the A.W.A. Type C1070 instrument is used, see that a 250,000 ohms resistor is connected between the output terminals and, for short wave alignment, a 400 ohms non-inductive resistor in series with the "hot" output lead.

Connect the ground connection of the test instrument to the receiver chassis.

Perform alignment in the proper order, starting with No. 1 and following all operations across, then No. 2, etc. Adjustment locations are shown in the lay-out diagrams. Keep the volume control set in the maximum clockwise position and regulate the output of the test instrument so that a minimum signal is introduced to the receiver to obtain an observable output indication. This will avoid A.V.C. action and overloading.

ADJUSTING TOOLS.

Two tools are used in the alignment procedure; one is a combination tool for air-trimmer adjustment and locking (Part No. 5371), and the other is a non-metallic screwdriver (Part No. 5372) specially constructed for adjusting the cores within the I.F. transformers and the broadcast oscillator coil.

ALIGNMENT TABLE

Alignment Order.	TEST INSTRUMENT. Test Inst. Connection to Receiver.	Test Inst. Setting.	RECEIVER. Receiver Dial Setting.	Circuit to Adjust.	Adjust for Max. Peak Output.
1	*6J8G Grid Cap	460 K.C.	550 K.C.	2nd I.F. Trans.	L13
2	*6J8G Grid Cap	460 K.C.	550 K.C.	2nd I.F. Trans.	L12
3	*6J8G Grid Cap	460 K.C.	550 K.C.	1st I.F. Trans.	L10
4	*6J8G Grid Cap	460 K.C.	550 K.C.	1st I.F. Trans.	L9
	Repeat the above adjustments before proceeding.				
5	Aerial Term.	600 K.C.	600 K.C.†	Oscillator	Core L6
6	Aerial Term.	1500 K.C.	1500 K.C.	Oscillator	C10
7	Aerial Term.	1500 K.C.	1500 K.C.	Aerial	C4
	Repeat adjustments 5, 6, and 7.				
8	Aerial Term.	15M.	15M.	Oscillator	C12††
9	Aerial Term.	15M.	15M.‡	Aerial	C5**

* With grid clip connected. A .001 mfd. condenser should be connected in series with the "hot" output lead of the test instrument.

† Rock the tuning control back and forth through the signal. Reset the dial pointer to 600 K.C. if necessary. The pointer is soldered to the control wire and may be moved by applying a hot soldering iron to the connection.

†† Use minimum capacity peak if two peaks can be obtained.

** Use maximum capacity peak if two peaks can be obtained. Check for image signal by tuning the receiver to approx. 15.75M. It may be necessary to increase the output of the test instrument to receive the signal.

‡ Rock the tuning control back and forth through the signal.

CIRCUIT DIAGRAM AND CODE, MODEL 56

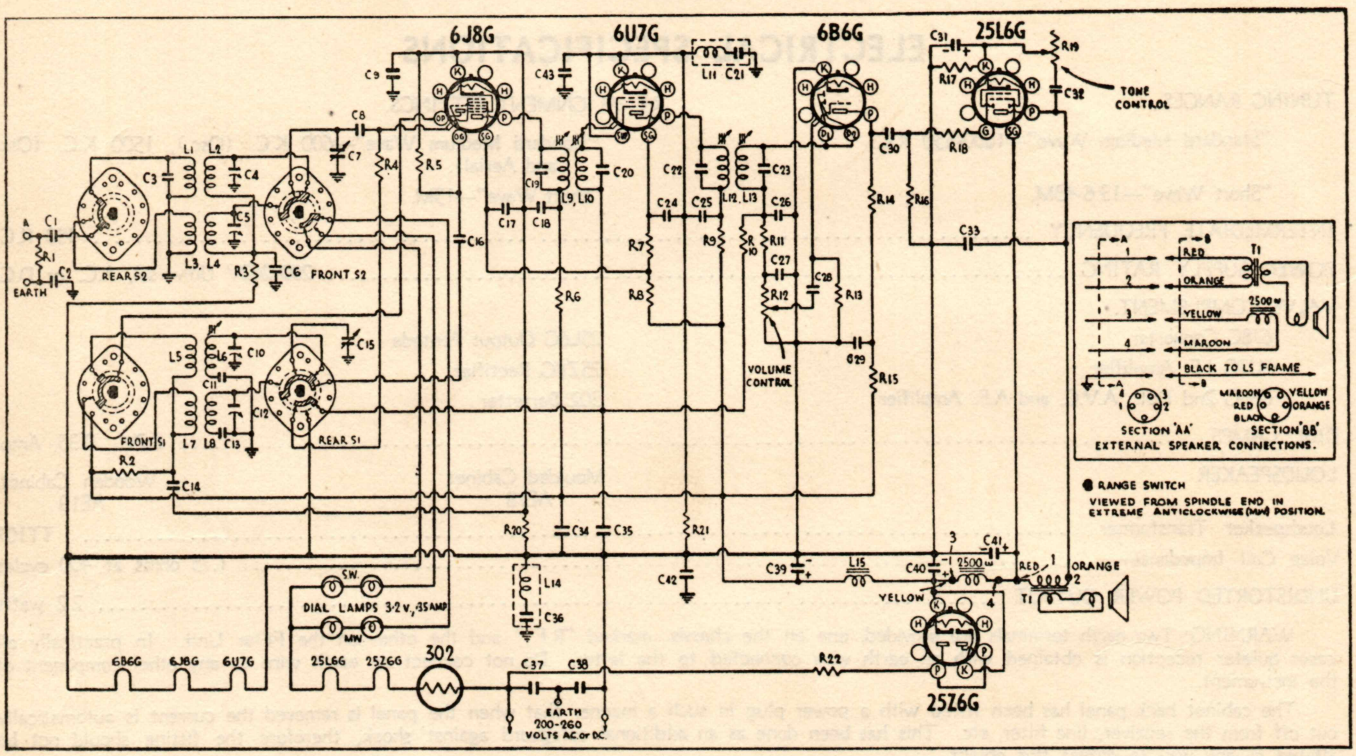

Code No.	Part No.	COILS
L1, L2	6747	Aerial Coil, 1600-550 K.C.
L3, L4	7518	Aerial Coil, 13.6-43M
L5, L6	4354	Osc. Coil, 1600-550 K.C.
L7, L8	7519	Osc. Coil, 13.6-43M.
L9, L10	7321	1st I.F. Transformer.
L11, C21	5080	Filter Unit.
L12, L13	4754	2nd I.F. Transformer.
L14, C36	5080	Filter Unit.
L15	5949	Filter Choke.
		TRANSFORMERS
T1	TT107	Loudspeaker Transformer.

Code No.	Part No.	RESISTORS
R1		100,000 ohms 1/3 W.
R2		20,000 ohms 1 W.
R3		400 ohms 1/3 W.
R4		500,000 ohms 1/3 W.
R5		30,000 ohms 1/3 W.
R6		600 ohms 1/3 W.
R7		600 ohms 1/3 W.
R8		15,000 ohms 2 W.
R9		600 ohms 1/3 W.
R10		1.75 megohms 1/3 W.
R11		60,000 ohms 1/3 W.
R12	5707	500,000 ohms Vol. Control.
R13		10 megohms 1 W.
R14		200,000 ohms 1 W.
R15		50,000 ohms 1 W.
R16		390,000 ohms 1/3 W.
R17		150 ohms 3 W.
R18		50,000 ohms 1/3 W.
R19	4540	100,000 ohms Tone Control.
R20		300 ohms 1/3 W.
R21		600 ohms 1/3 W.
R22		100 ohms 3 W.
R23		20,000 ohms 1 W

Code No.	Part No.	CONDENSERS
C1		500 mmfd. mica.
C2		500 mmfd. mica.
C3		50 mmfd. mica (D)
C4	3661	2-20 air trimmer.
C5	3411A	11-29 air trimmer.
C6		.02 mfd. paper.
C7	4577	Tuning condenser.
C8		350 mmfd. mica.
C9		.02 mfd. paper.
C10	3411A	11-29 mfd. air trim.
C11		420 mmfd. mica (padder).
C12	3658	2-10 mmfd. air trim
C13		3,500 mmfd. mica (padder).
C14		.05 mfd. paper.
C15	4577	Tuning condenser.
C16		70 mmfd. mica (N).
C17		.1 mfd. paper.
C18		.1 mfd. paper.
C19		70 mmfd. mica (N)
C20		70 mmfd. mica (N)
C21		3,500 mmfd. mica.
C22		70 mmfd. mica (N)
C23		70 mmfd. mica (N).
C24		.1 mfd. paper.
C25		.1 mfd. paper.
C26		110 mmfd. mica (L).
C27		110 mmfd. mica (L).
C28		.01 mfd. paper.
C29		.5 mfd. paper.
C30		.01 mfd. paper.
C31		25 mfd., 25V. electrolytic.
C32		.1 mfd. paper.
C33		.0025 mfd. paper.
C34		.1 mfd. paper.
C35		.05 mfd. paper.
C36		3,500 mmfd. mica
C37		.1 mfd. paper.
C38		.1 mfd. paper.
C39		16 mfd., 450V. electrolytic.
C40		8 mfd. 500V. electrolytic.
C41		8 mfd. 500V. electrolytic.
C42		.01 mfd. paper.
C43		.01 mfd. paper.

SOCKET VOLTAGES.

VALVE.	Cathode to Negative. Volts.	Screen Grid to Negative. Volts.	Plate to Negative. Volts.	Plate Current M.A.	Heater. Volts.
6J8G Detector, M.W ..	2.5	80	205	1.0	6.3
S.W. ..	2.5	80	205	1.5	—
Oscillator, M.W.	—	—	125	4.0	—
S.W.	—	—	125	4.0	—
6U7G I.F. Amplifier ..	3.5	80	205	4.5	6.3
6B6G 2nd Det.	0	—	120	0.35	6.3
25L6G Output	7.0	105	85*	38	25.0
25Z6G Rectifier	230	—	235	—	25.0

Voltage across loudspeaker field—120 volts.
* Cannot be measured with ordinary voltmeter.
Measured at 240 volts D.C. No signal.
Volume control in maximum clockwise position.

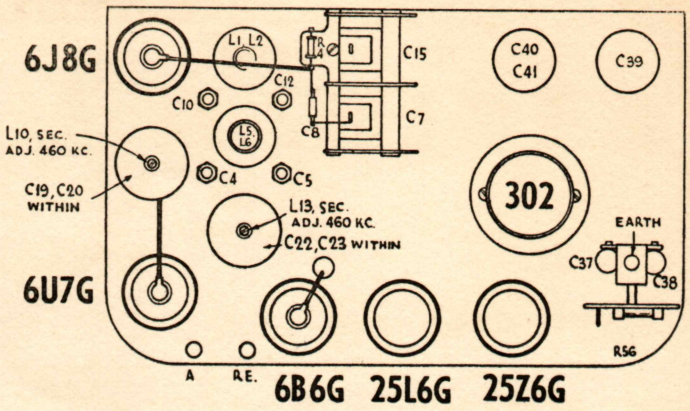

Layout Diagram—(Top view).

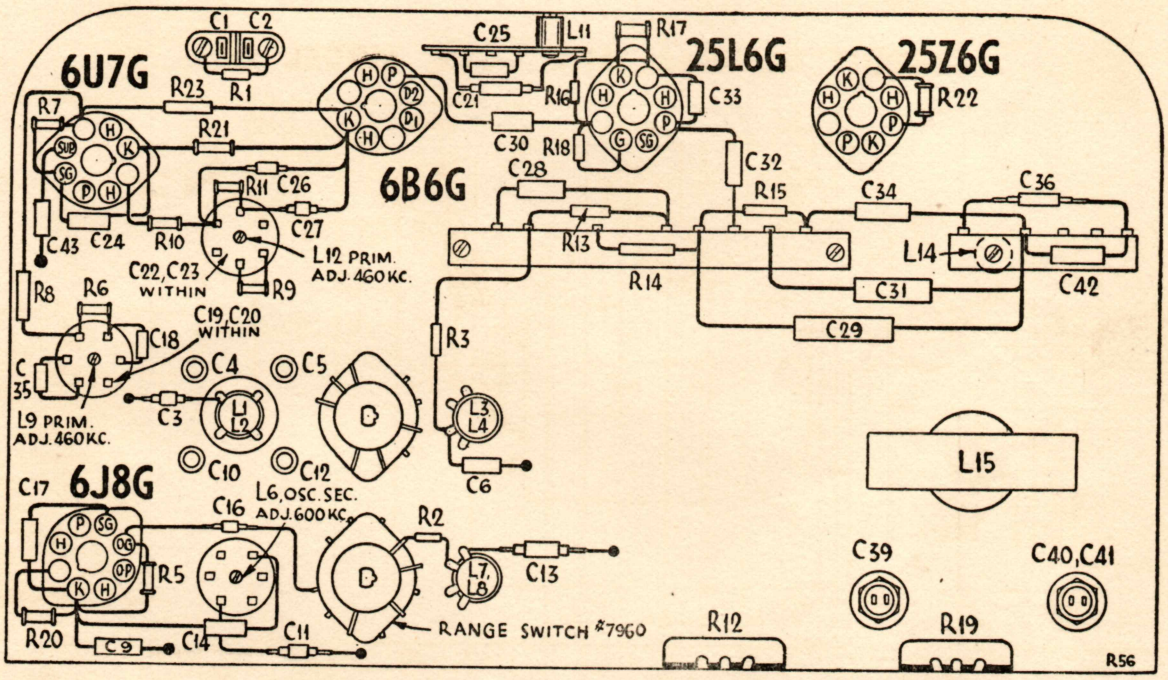

Layout Diagram—(Underneath view).

MECHANICAL REPLACEMENT PARTS

DESCRIPTION	Part No.
TUNING MECHANISM.	
Loudspeaker Cone Assembly	7935
Pointer	4248
Pointer Saddle	4243
Pointer Saddle Spring	4246
Pointer Tension Spring	1741
Pointer Drive Wire	
Drive Wire Jockey Pulleys	1730
Pointer Drive Drum	4312
Tuning Drive Spindle	4522
Tuning Drive Spindle Disc Assembly	4363
Intermediate Drive Disc Assembly	4361
Main Drive Segment	1692

DESCRIPTION	Part No.
Dial Scale (M.W.)	7525
Dial Scale (S.W.)	7526
Dial Scale Retaining Clips	1981
Dial Lamp Sockets	4195
Extension Spindles (long)	5271
Extension Spindles (short)	5272
MISCELLANEOUS.	
Range Switch	7856
Valve Sockets	4701
Aerial and Earth Term. Unit	1579
Valve Grid Clips	7459
Barretter Shield Assembly	6093